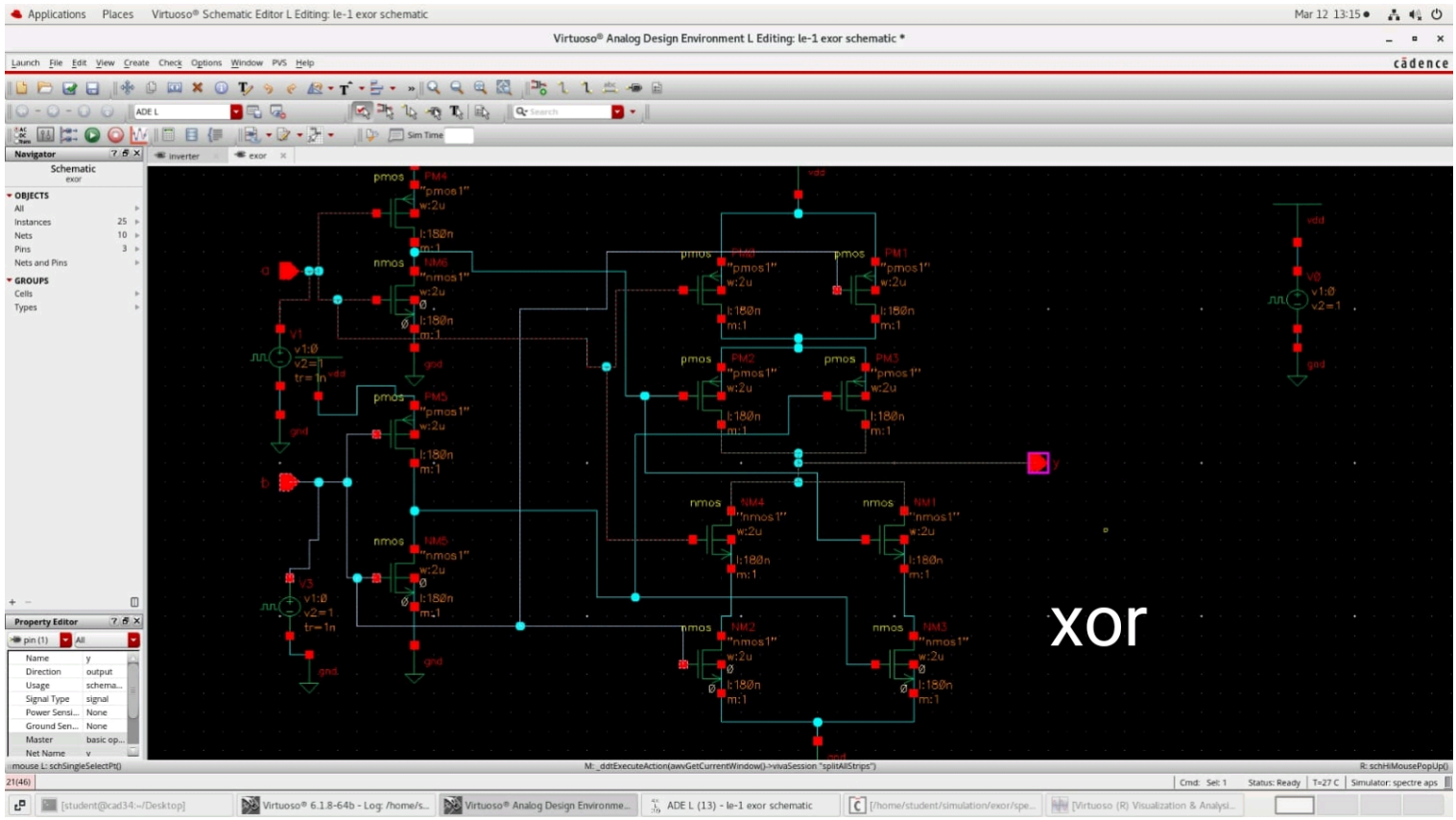
Virtuoso® Analog Design Environment L Editing: le-1 exor schematic *
xor

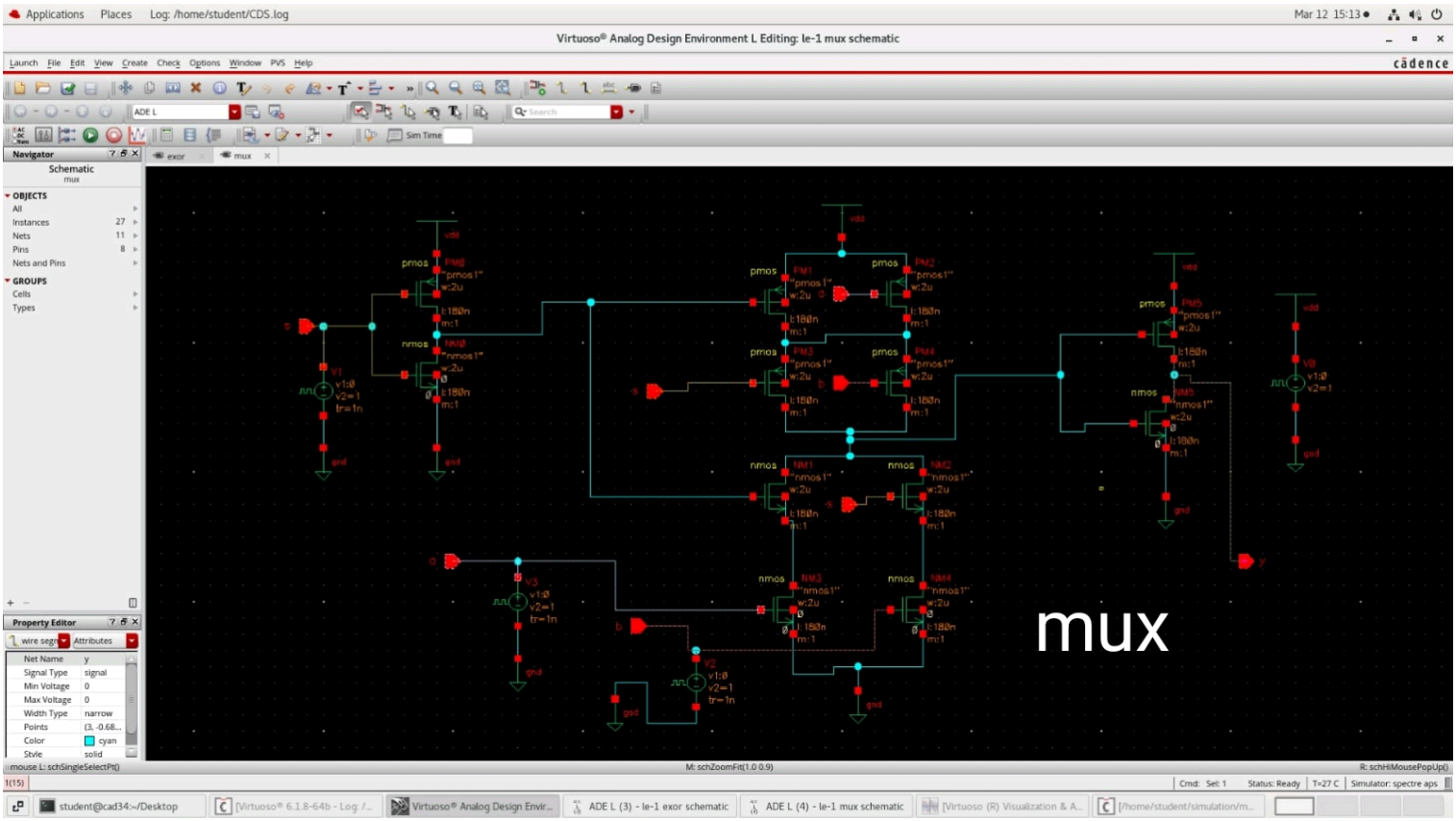
Virtuoso® Analog Design Environment L Editing: le-1 mux schematic
mux

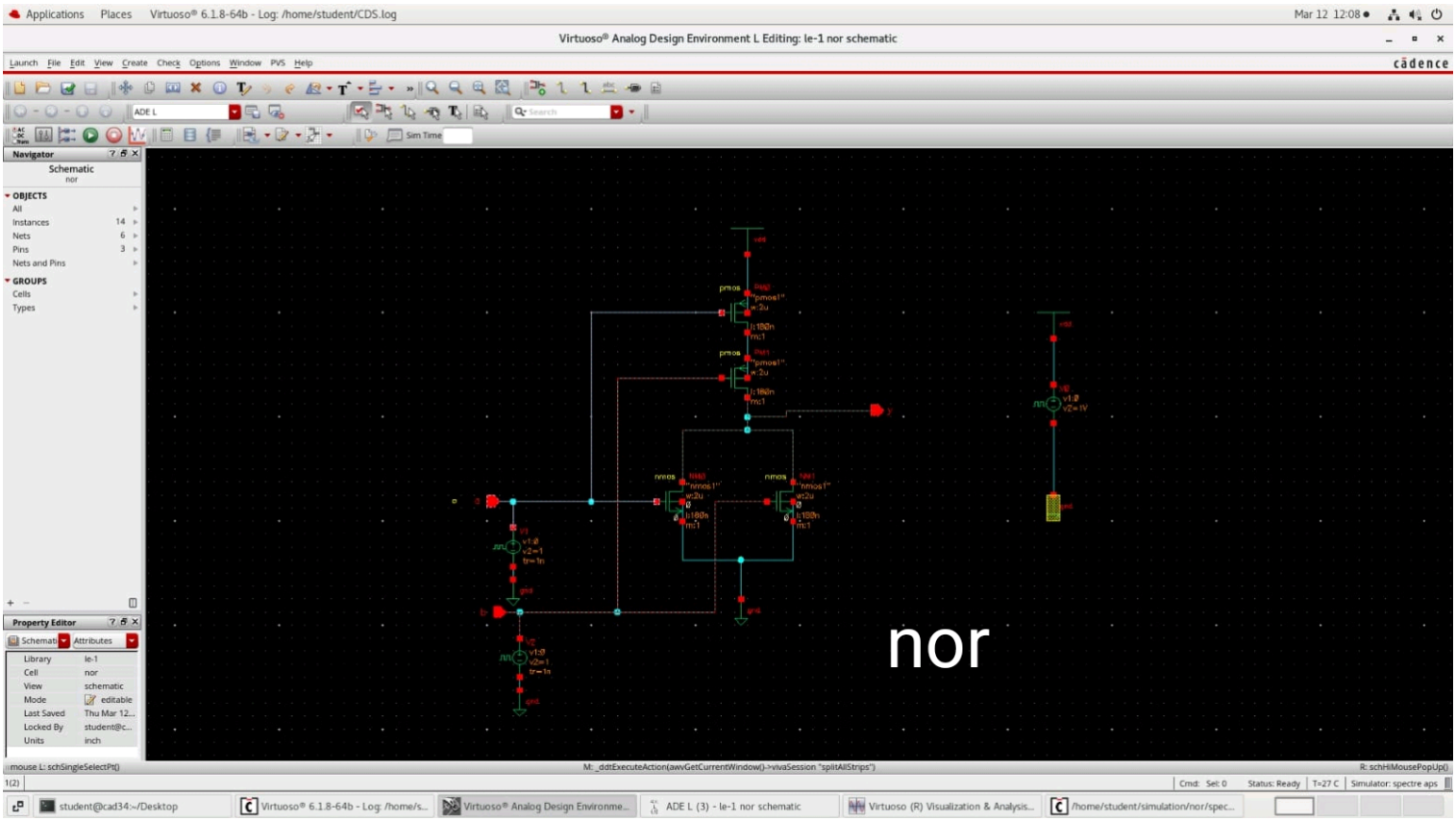
Applications Places Virtuoso® 6.1.8-64b - Log: /home/student/CDS.log
Mar 12 12:08
Virtuoso® Analog Design Environment L Editing: le-1 nor schematic
Launch File Edit View Create Check Options Window PVS Help
cadence
Navigator
Schematic
nor
OBJECTS
All
Instances 14
Nets 6
Pins 3
Nets and Pins
GROUPS
Cells
Types
Property Editor
Library le-1
Cell nor
View schematic
Mode editable
Last Saved Thu Mar 12...
Locked By student@c...
Units inch
nor

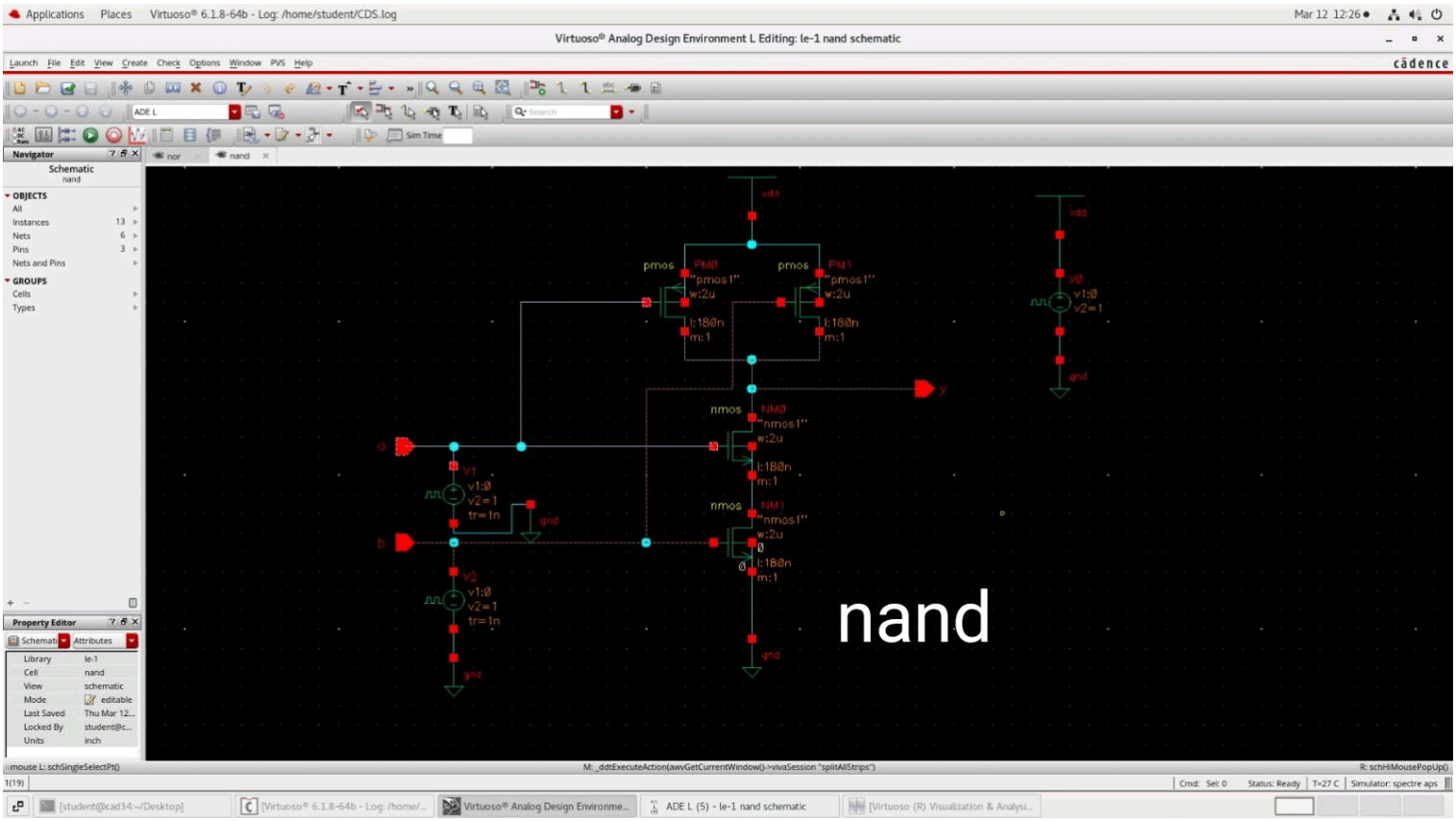
Virtuoso® Analog Design Environment L Editing: le-1 nand schematic
nand
pmos
PM0
"pmos1"
w:2u
l:180n
m:1
PM1
nmos
NM0
"nmos1"
NM1
vdd
gnd
a
b
y
V1
V2
v1:0
v2=1
tr=1n

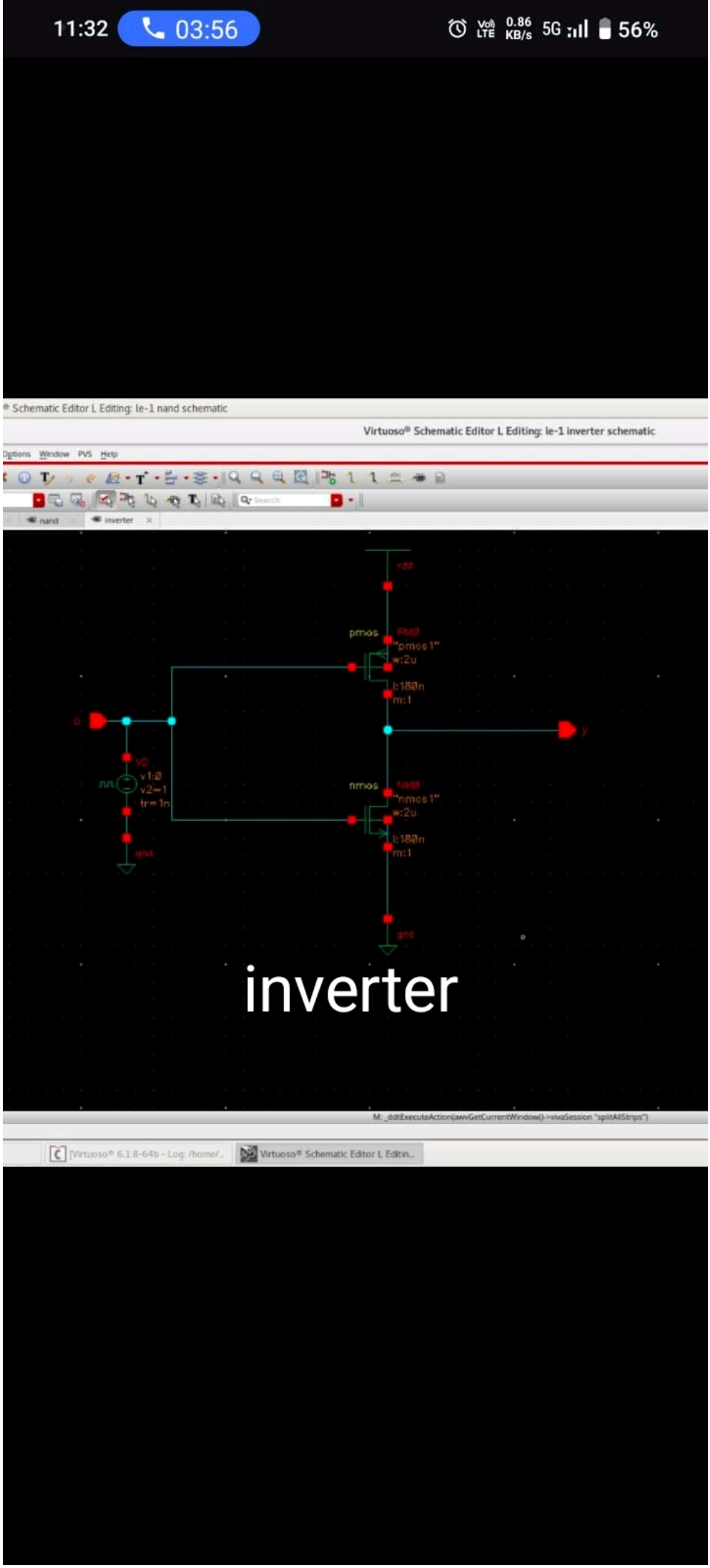
11:32
03:56
56%
Schematic Editor L Editing: le-1 nand schematic
Virtuoso® Schematic Editor L Editing: le-1 inverter schematic
Options Window PVS Help
nand
inverter
vdd
pmos
"pmos1"
w:2u
l:180n
m:1
a
y
V2
v1:0
v2=1
tr=1n
gnd
nmos
"nmos1"
w:2u
l:180n
m:1
gnd
inverter
Virtuoso® Schematic Editor L Editin...

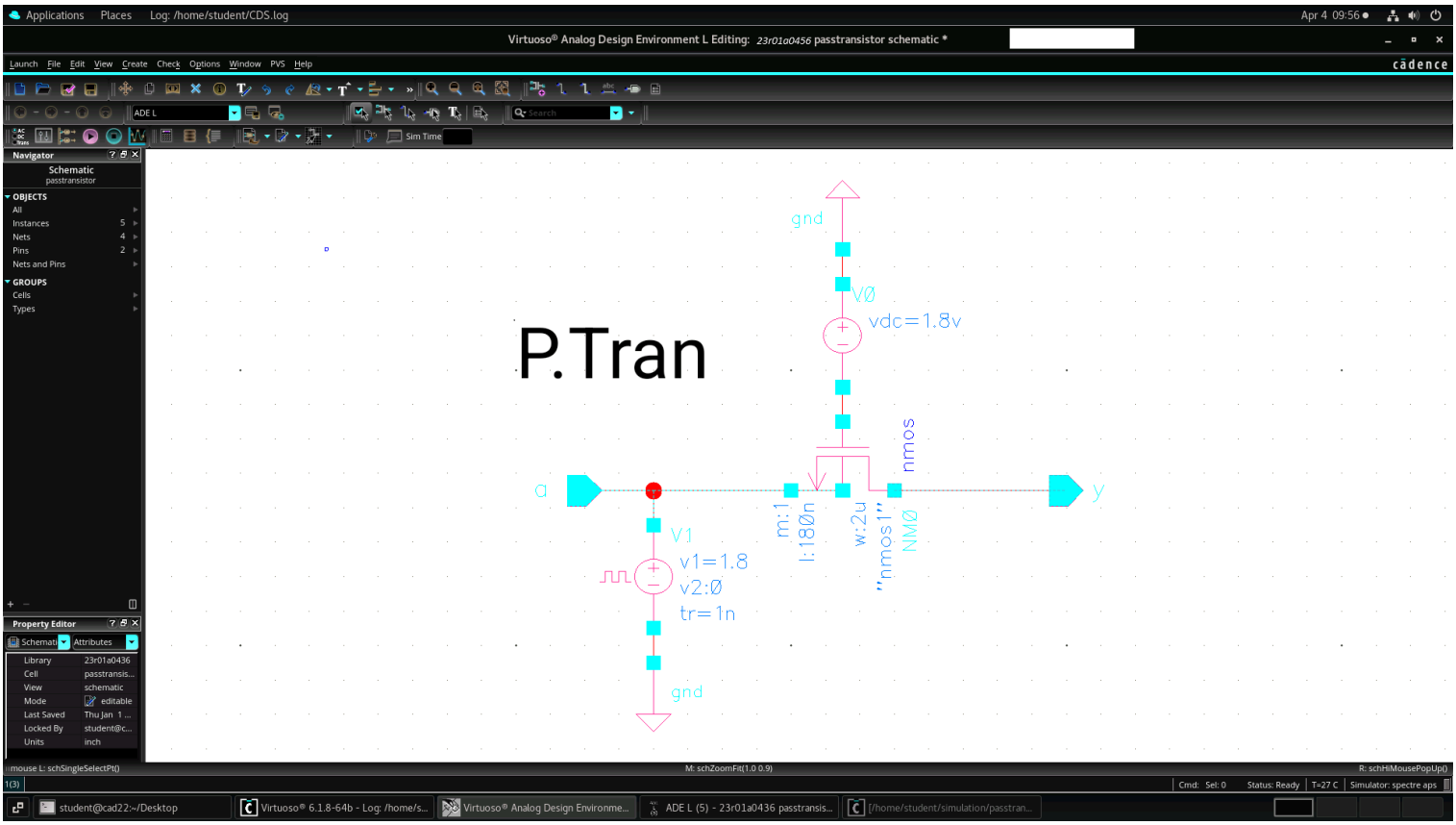
Virtuoso® Analog Design Environment L Editing: 23r01a0456 passtransistor schematic *
P.Tran
gnd
V0
vdc=1.8v
nmos
a
y
m:1
l:180n
w:2u
"nmos1"
NM0
V1
v1=1.8
v2:0
tr=1n
gnd

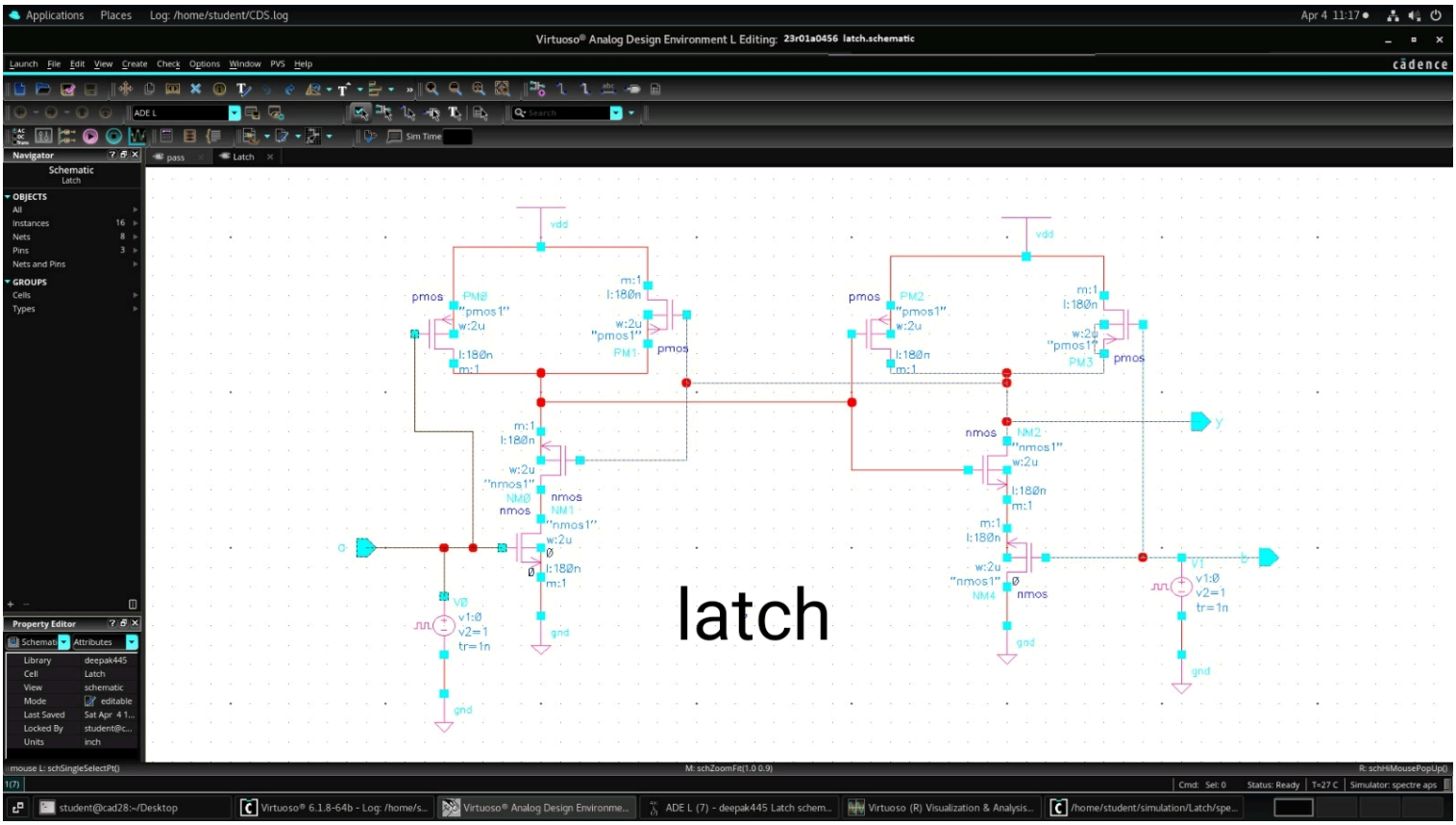
Virtuoso® Analog Design Environment L Editing: 23r01a0456 latch.schematic
latch
vdd
gnd
pmos
nmos
PM0
PM1
PM2
PM3
NM0
NM1
NM2
NM4
"pmos1"
"nmos1"
w:2u
l:180n
m:1
V0
V1
v1:0
v2=1
tr=1n
a
b
y